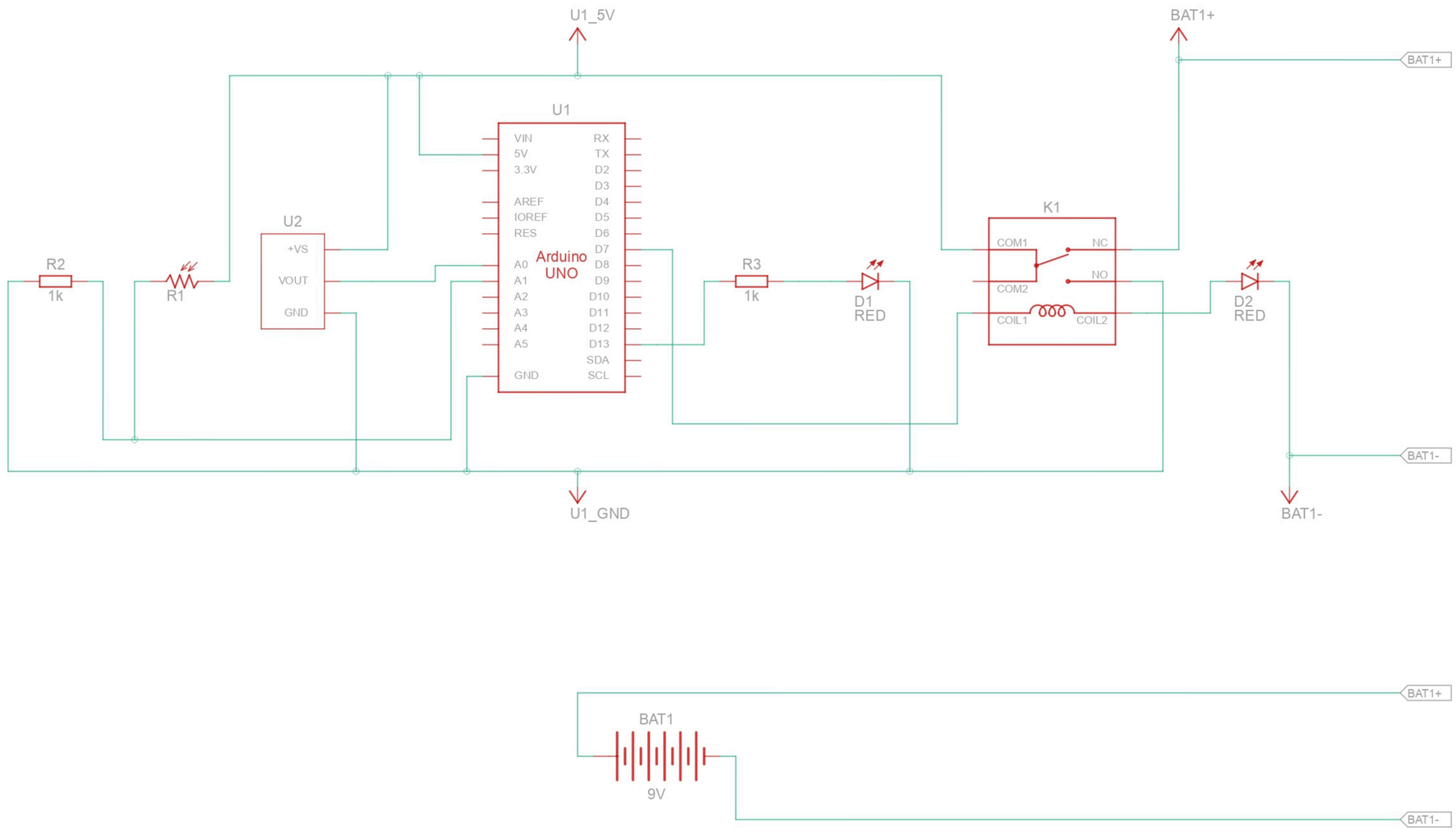

Name	Quantity	Component
U1	1	Arduino Uno R3
U2	1	Temperature Sensor [TMP36]
R1	1	Photoresistor
R2, R3	2	1 kΩ Resistor
D1, D2	2	Red LED
BAT1	1	9V Battery
K1	1	Relay SPDT
Meter1	1	Voltage Multimeter

Title: Powerful Kasi

Date: 4/19/2026, 5:03:55 PM

Sheet: 1/1